| REVISIONS | | | |
|---|---|---|---|
| REV | DESCRIPTION | DATE | BY |
| | | | |
| | | | |

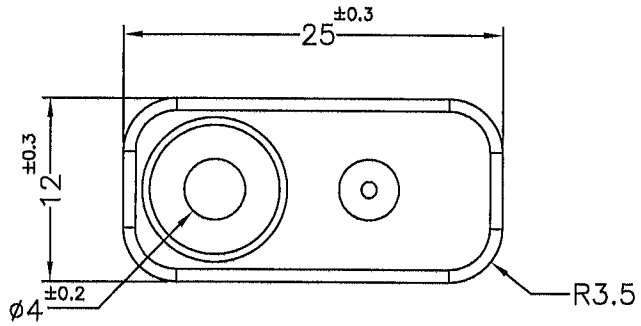


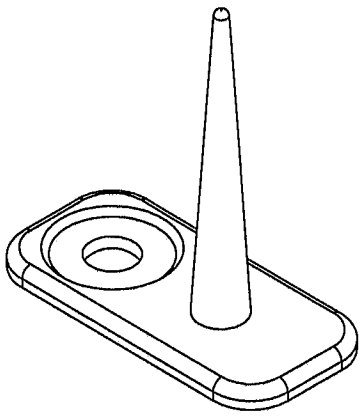

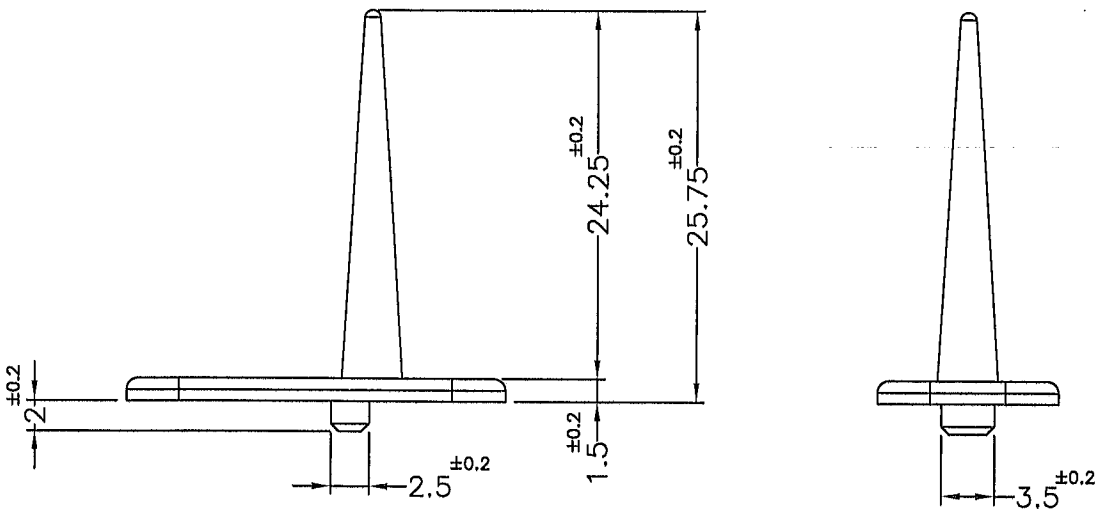


NOTE:MADE OF EQUIVALENT MATERIAL.
可使用同等材質.

康揚企業股份有限公司
KANG YANG HARDWARE ENTERPRISE CO., LTD.
康揚塑膠(東莞)有限公司
KANG YANG PLASTIC(DONG GUAN )CO.,LTD.
康哲電腦配件(吳江)有限公司
KANG CHE COMPUTER COMPONENTS(WUJIANG) CO.,LTD.
ISO 9001
ISO 14001
QC 080000

| | | | |
|---|---|---|---|
| TITLE | SPACER SUPPORT | SPEC. DWG. | |
| MATERIAL | PC UL94V-0 | DATE | 2015.07.02 |
| FINISH | | DRAWN | T.C |
| COLOR | WHITE | CHECK | 朱益建 |
| UNLESS OTHERWISE SPECIFIED TOLERANCE | SEE ABOVE | APPROVED | Kang |

| PART NUMBER | DRAWING NUMBER | | |
|---|---|---|---|
| MCFJ-1V0(W) | MCFJ-1 | | |
| SIZE A4 | SCALE 2:1 | UNIT mm | REV A |