REVISIONS			
REV	DESCRIPTION	DATE	BY

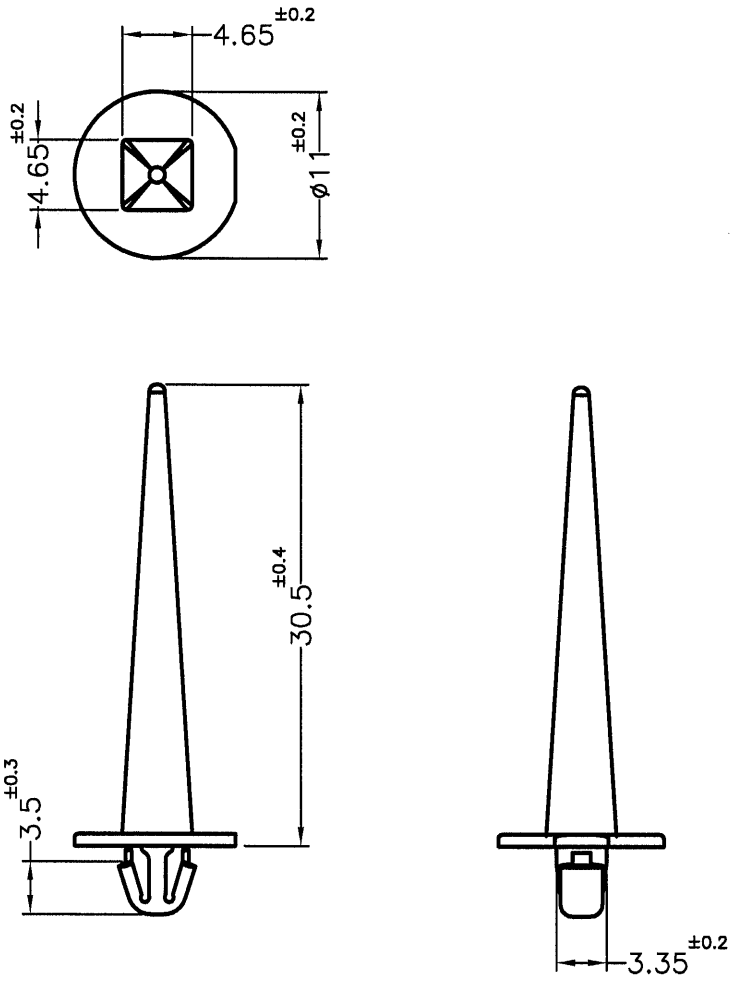

PART NO.	COLOR
MCFG-3010PC	TRANSPARENT
MCFG-3010PCW	WHITE

NOTE:MADE OF EQUIVALENT MATERIAL.
均可使用同等材質.

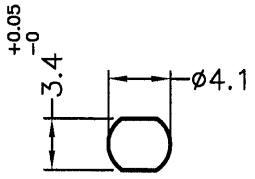

MOUNTING HOLE
THICKNESS 1.0 mm

康揚企業股份有限公司
KANG YANG HARDWARE ENTERPRISE CO., LTD.
康揚塑膠(東莞)有限公司
KANG YANG PLASTIC(DONG GUAN)CO.,LTD.
康哲電腦配件(吳江)有限公司
KANG CHE COMPUTER COMPONENTS(WUJIANG) CO.,LTD.
ISO 9001
ISO 14001
QC 080000

TITLE: SPACER SUPPORT			SPEC. DWG.
MATERIAL: PC UL94V-2			DATE: 2014.11.14
HARDNESS:			DRAWN: Y.C.P
COLOR: SEE ABOVE			CHECK: 朱益遠
UNLESS OTHERWISE SPECIFIED TOLERANCE: SEE ABOVE			APPROVED: Kang
PART NUMBER: SEE ABOVE	DRAWING NUMBER: MCFG-3010PC		
SIZE: A4	SCALE: 2:1	UNIT: mm	REV: A