DIM.	TOL
L≤10	±0.2
10<L≤30	±0.3
30<L≤50	±0.5
50<L≤100	±0.7
100<L≤250	±1.2
ABOVE 250	±1.5

REVISIONS			
REV	DESCRIPTION	DATE	BY

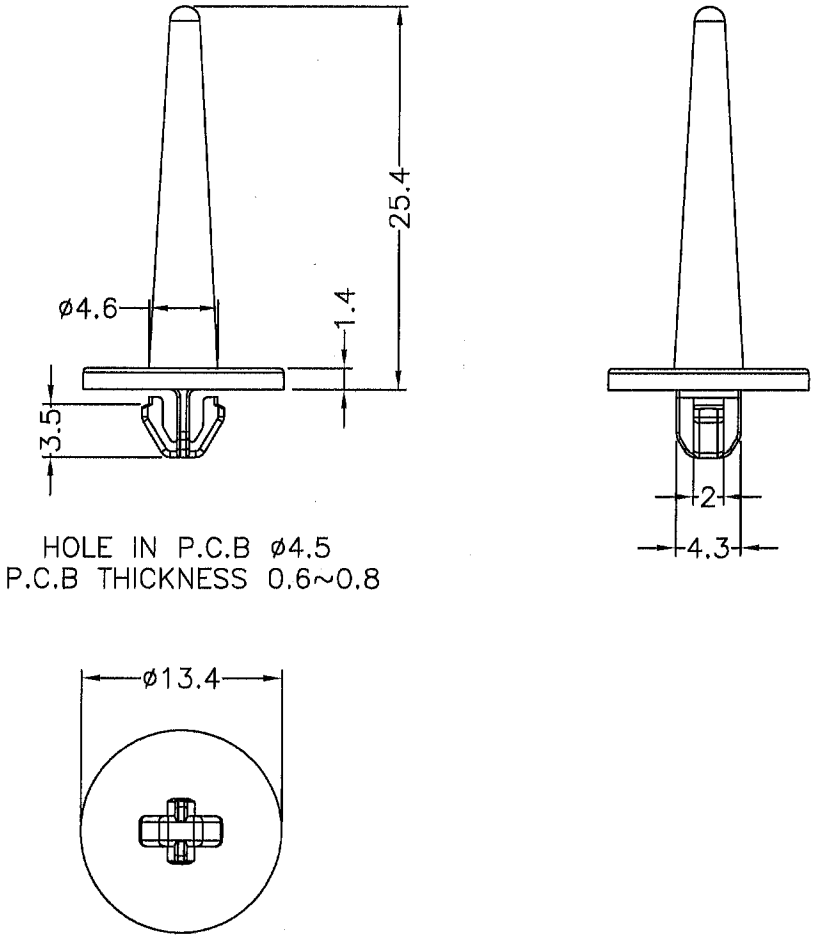

NOTE:All measurement does not include gate which raises under 0.3mm.

康揚企業股份有限公司
KANG YANG HARDWARE ENTERPRISE CO., LTD.
康揚塑膠(東莞)有限公司
KANG YANG PLASTIC(DONG GUAN)CO.,LTD.
康哲電腦配件(吳江)有限公司
KANG CHE COMPUTER COMPONENTS(WUJIANG) CO.,LTD.
ISO 9001
ISO 14001
QC 080000

TITLE	SPACER SUPPORT	SPEC. DWG.	
MATERIAL	PC UL94V-0	DATE	2014.04.29
FINISH		DRAWN	C. S. L
COLOR	NATURAL(WHITE)	CHECK	王月賜
UNLESS OTHERWISE SPECIFIED TOLERANCE	SEE ABOVE	APPROVED	Kang

PART NUMBER	DRAWING NUMBER		
MCFC-2508PCV0	MCFC-2508		
SIZE A4	SCALE 2:1	UNIT mm	REV A