DIM.	TOL
L≤10	±0.2
10<L≤30	±0.3
30<L≤50	±0.5
50<L≤100	±0.7
100<L≤250	±1.2
ABOVE 250	±1.5

REVISIONS			
REV	DESCRIPTION	DATE	BY

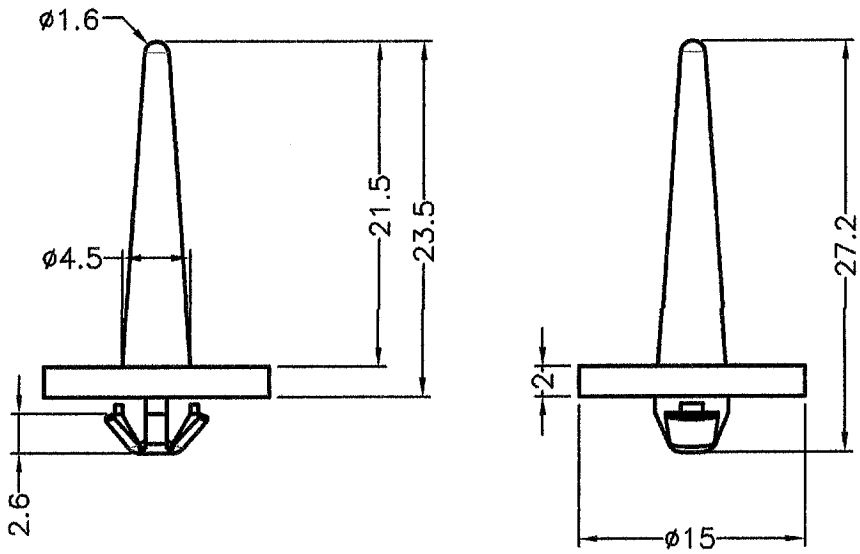

HOLE IN P.C.B: ø5.2
P.C.B THICKNESS: 0.8~1.0

NOTE:All measurement does not include gate which raises under 0.3mm.

康揚企業股份有限公司
KANG YANG HARDWARE ENTERPRISE CO., LTD.
康揚塑膠(東莞)有限公司
KANG YANG PLASTIC(DONG GUAN)CO.,LTD.
康哲電腦配件(吳江)有限公司
KANG CHE COMPUTER COMPONENTS(WUJIANG) CO.,LTD.
ISO 9001
ISO 14001
QC 080000

TITLE	SPACER SUPPORT	SPEC. DWG.	
MATERIAL	PC UL94V-0	DATE	2013.10.24
FINISH		DRAWN	ALBERT
COLOR	NATURAL(WHITE)	CHECK	朱益賢
UNLESS OTHERWISE SPECIFIED TOLERANCE	SEE ABOVE	APPROVED	Kang

PART NUMBER	DRAWING NUMBER		
MCF-2310PCV0	MCF-2310PCV0		
SIZE A4	SCALE 2:1	UNIT mm	REV A