REVISIONS			
REV	DESCRIPTION	DATE	BY

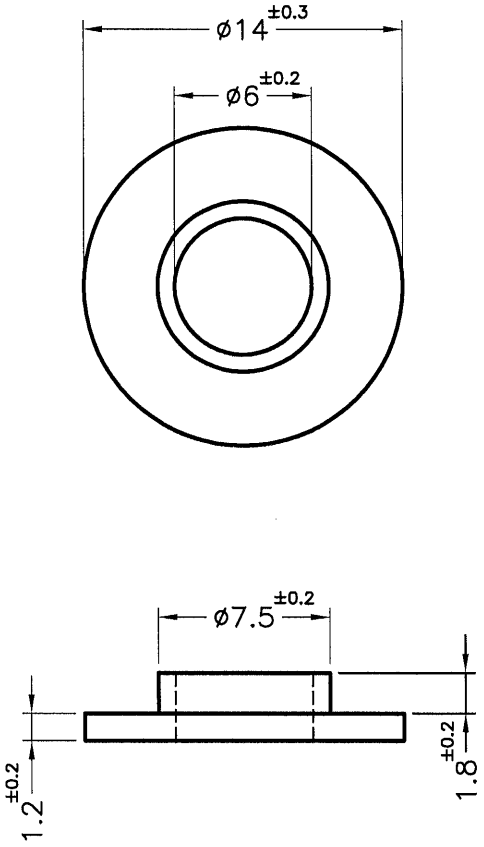

NOTE:1.MADE OF EQUIVALENT MATERIAL.
均可使用同等材質.
2.WITH HALOGEN
有鹵料.

康揚企業股份有限公司
KANG YANG HARDWARE ENTERPRISE CO., LTD.
康揚塑膠(東莞)有限公司
KANG YANG PLASTIC(DONG GUAN)CO.,LTD.
康哲電腦配件(吳江)有限公司
KANG CHE COMPUTER COMPONENTS(WUJIANG) CO.,LTD.
ISO 9001
ISO 14001
QC 080000

TITLE: TRANSISTOR WASHERS		SPEC. DWG	
MATERIAL: PBT UL94V-0+GF		DATE: 2005.11.09	
FINISH		DRAWN: TRACY	
COLOR: NATURAL		CHECK: Will	
UNLESS OTHERWISE SPECIFIED TOLERANCE: SEE ABOVE		APPROVED: Kang	
PART NUMBER: TW-29	DRAWING NUMBER: TW-29PBT		
SIZE: A4	SCALE: 3:1	UNIT: mm	REV: A