Note: 1. Door lock finished dimensions Location.
門扣成品尺寸位置.

① Unlock position: 4.1 REF.
打開時的開放位置

② Minimum press-in distance to lock: 5.6 REF.
扣合所需的最小距離位置

③ Maximum press-in distance to lock: 6 REF.
扣合時最大壓入位置

④ Lock up position: 3.4 REF.
扣合時的位置

⑤ Minimum press-in distance to unlock: 1.1 REF.
打開所需的最小距離位置

⑥ Maximum press-in distance to unlock: 1.5 REF.
打開時最大壓入位置

2. Made of equivalent material.
均可使用同等材質.

3. The color batch test report is only for first lot test.
色母環保檢測報告,僅提供原始測試報告.

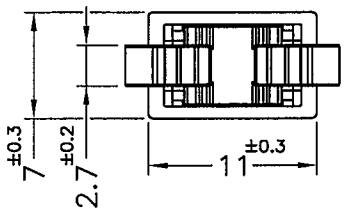

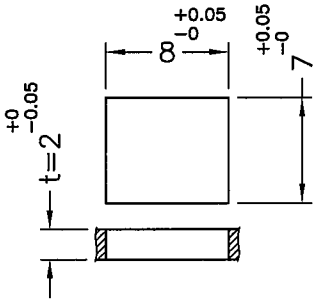

RECOMMEND MOUNTING HOLE

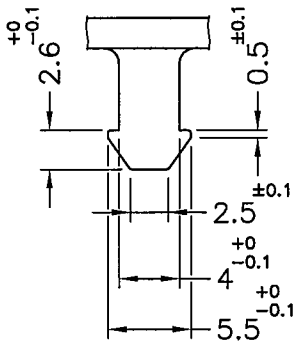

RECOMMEND PIN SIZE
or
K.Y DTA-1

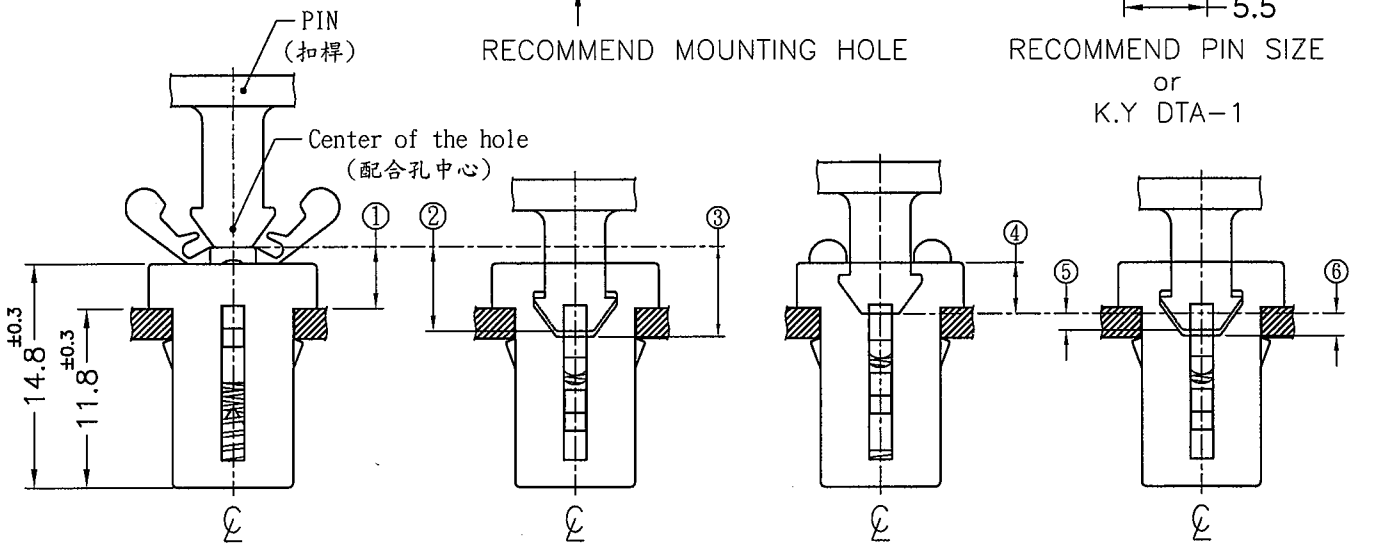

Unlock
開起時

press-in distance to lock
扣合時行程

Lock
扣合時

press-in distance to unlock
開起時行程

康揚企業股份有限公司
KANG YANG HARDWARE ENTERPRISE CO., LTD.
康揚塑膠(東莞)有限公司
KANG YANG PLASTIC(DONG GUAN)CO.,LTD.
康哲電腦配件(吳江)有限公司
KANG CHE COMPUTER COMPONENTS(WUJIANG)CO.,LTD.
ISO 9001
ISO 14001
QC 080000
IATF 16949

PROPRIETARY AND CONFIDENTIAL
THE INFORMATION CONTAINED IN THIS DRAWING IS THE SOLE PROPERTY OF KANG YANG HARDWARE ENTERPRISE CO. ANY REPRODUCTION IN PART OR AS A WHOLE WITHOUT THE WRITTEN PERMISSION OF KANG YANG HARDWARE ENTERPRISE CO. IS PROHIBITED.

DO NOT SCALE DRAWING

DATE 2005.09.29	TITLE DOOR LOCK	DWG. NO. DT-4	PART NO. DT-4
DRAWN K.W	CATCHER MATERIAL / COLOR NYLON66 UL94V-2 / BLACK		
CHECKED Kenny	CASE MATERIAL / COLOR POM UL94VHB / BLACK	SIZE A4	SPEC. DWG	REV B
APPROVED Kang	UNLESS OTHERWISE SPECIFIED TOLERANCE: SEE ABOVE	SCALE: 2:1	UNIT mm	SHEET 1 OF 1