DIM.	TOL
L≤10	±0.2
10<L≤30	±0.3
30<L≤50	±0.5
50<L≤100	±0.7
100<L≤250	±1.2
ABOVE 250	±1.5

REVISIONS			
REV	DESCRIPTION	DATE	BY

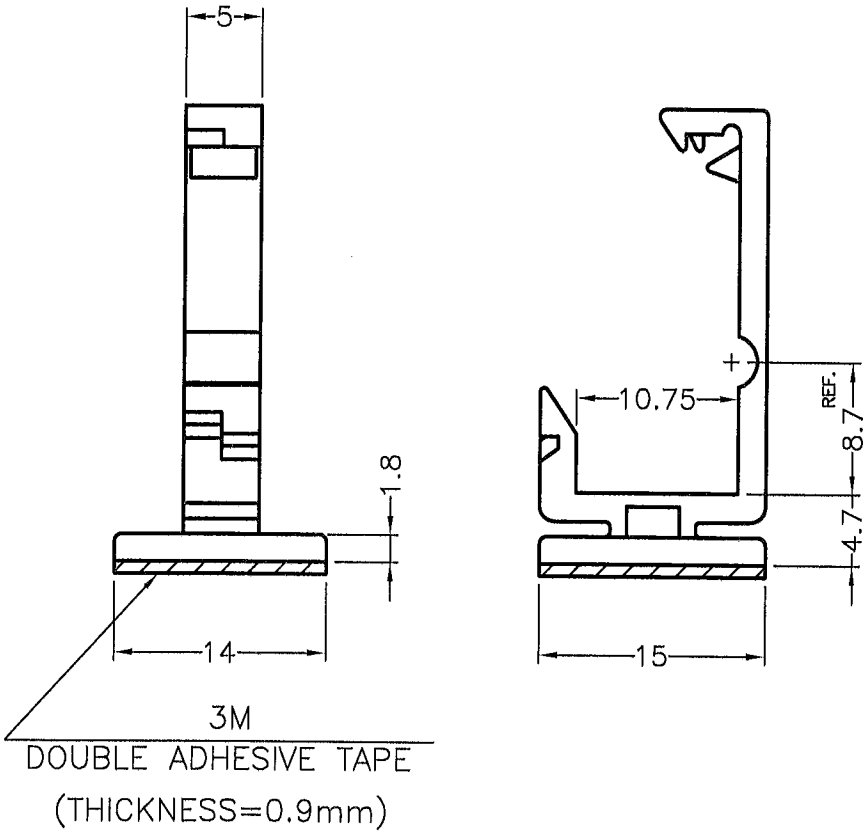

NOTE:1. The height is not included thickness of adhesive tape and separate paper.
2. All measurement does not include gate which raises under 0.3mm.
3. The adhesive tape is cut by hand , it is normal if there is a not unified edge.
4. The reduced is normal.

康揚企業股份有限公司
KANG YANG HARDWARE ENTERPRISE CO., LTD.
康揚塑膠(東莞)有限公司
KANG YANG PLASTIC(DONG GUAN)CO.,LTD.
康哲電腦配件(吳江)有限公司
KANG CHE COMPUTER COMPONENTS(WUJIANG) CO.,LTD.
ISO 9001
ISO 14001
QC 080000

TITLE: WIRE MOUNT			SPEC. DWG.
MATERIAL: NYLON 66 UL94V-2			DATE: 2011.02.14
HARDNESS:			DRAWN: Eric
COLOR: NATURAL			CHECK: 朱益建
UNLESS OTHERWISE SPECIFIED TOLERANCE: SEE ABOVE			APPROVED: Kang
PART NUMBER: WLN-5(3M)	DRAWING NUMBER: WLN-5		
SIZE: A4	SCALE: 2:1	UNIT: mm	REV: A