DIM.	TOL
5mm DOWN	±0.2
5~20mm	±0.3
20~40mm	±0.4
40~60mm	±0.5
60~100mm	±0.8
100mm UP	±1.0

REVISIONS			
REV	DESCRIPTION	DATE	BY

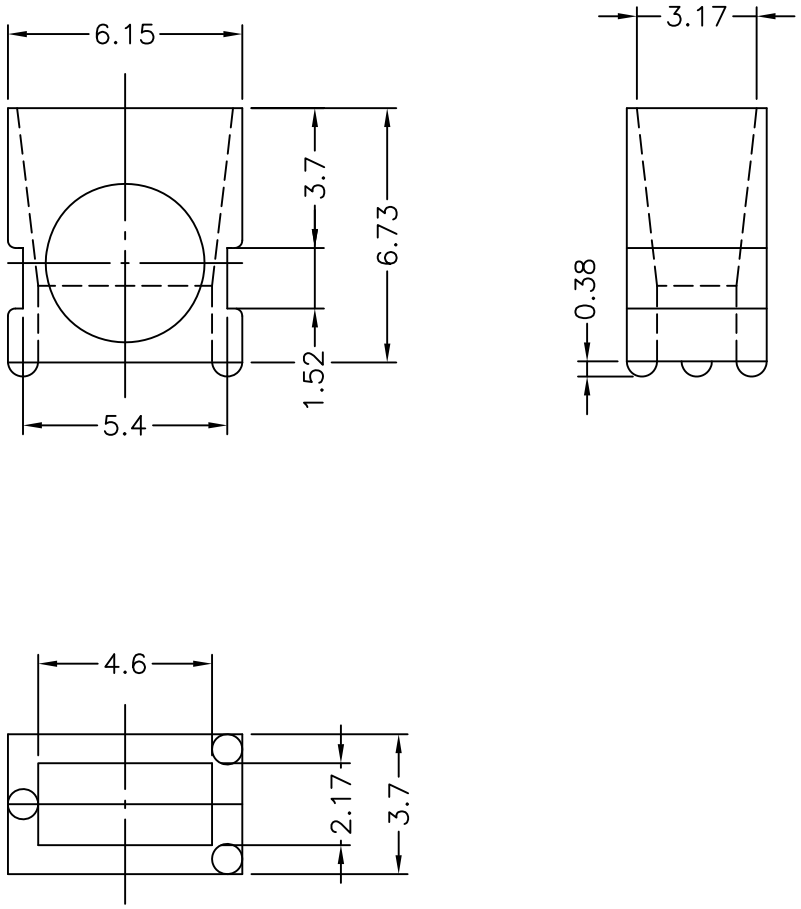

康揚企業股份有限公司
KANG YANG HARDWARE ENTERPRISE CO., LTD.
康揚塑膠(東莞)有限公司
KANG YANG PLASTIC(DONG GUAN)CO.,LTD.
康哲電腦配件(吳江)有限公司
KANG CHE COMPUTER COMPONENTS(WUJIANG) CO.,LTD.
ISO 9001
ISO 14001
QC 080000

TITLE	LED COVER	SPEC. DWG.	
MATERIAL	PC	DATE	2001.07.23
FINISH		DRAWN	S.J.C.
COLOR	WHITE	CHECK	
UNLESS OTHERWISE SPECIFIED TOLERANCE	SEE ABOVE	APPROVED	

PART NUMBER	DRAWING NUMBER		
ELED-1(W)	ELED-1		
SIZE A4	SCALE 5:1	UNIT mm	REV C