REVISIONS			
REV	DESCRIPTION	DATE	BY

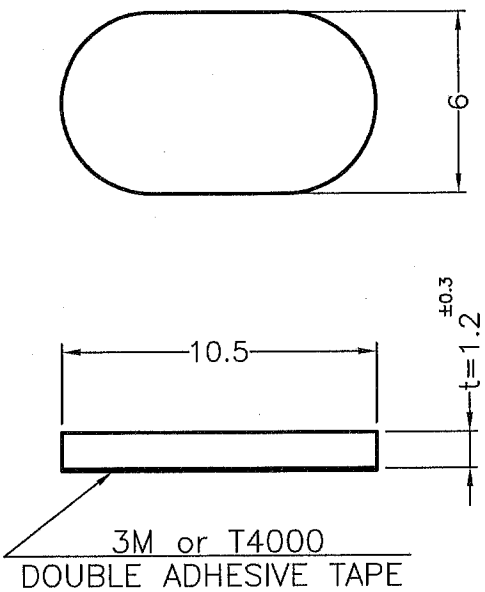

NOTE:Height include adhesive tape , not include release paper.

PART NO.	COLOR
PT100612	BLACK
PT100612(C	COMPUTER

康揚企業股份有限公司
KANG YANG HARDWARE ENTERPRISE CO., LTD.
康揚塑膠(東莞)有限公司
KANG YANG PLASTIC(DONG GUAN)CO.,LTD.
康哲電腦配件(吳江)有限公司
KANG CHE COMPUTER COMPONENTS(WUJIANG) CO.,LTD.
ISO 9001
ISO 14001
QC 080000

TITLE: RUBBER FOOT		SPEC. DWG.	
MATERIAL: RUBBER(NR)		DATE: 2000.08.15	
HARDNESS:		DRAWN: JASON	
COLOR: SEE ABOVE		CHECK: 林益賢	
UNLESS OTHERWISE SPECIFIED TOLERANCE: ±0.4		APPROVED: Kang	
PART NUMBER: SEE ABOVE	DRAWING NUMBER: PT100612		
SIZE: A4	SCALE: 4:1	UNIT: mm	REV: B