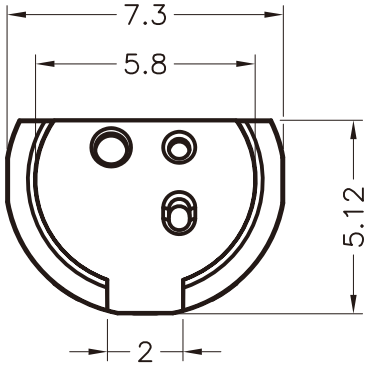

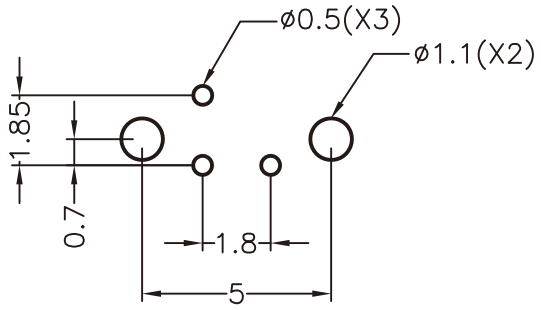
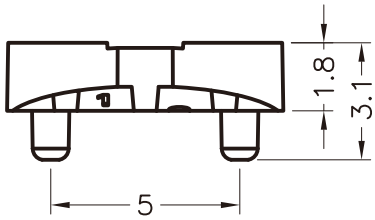
MOUNTING HOLE