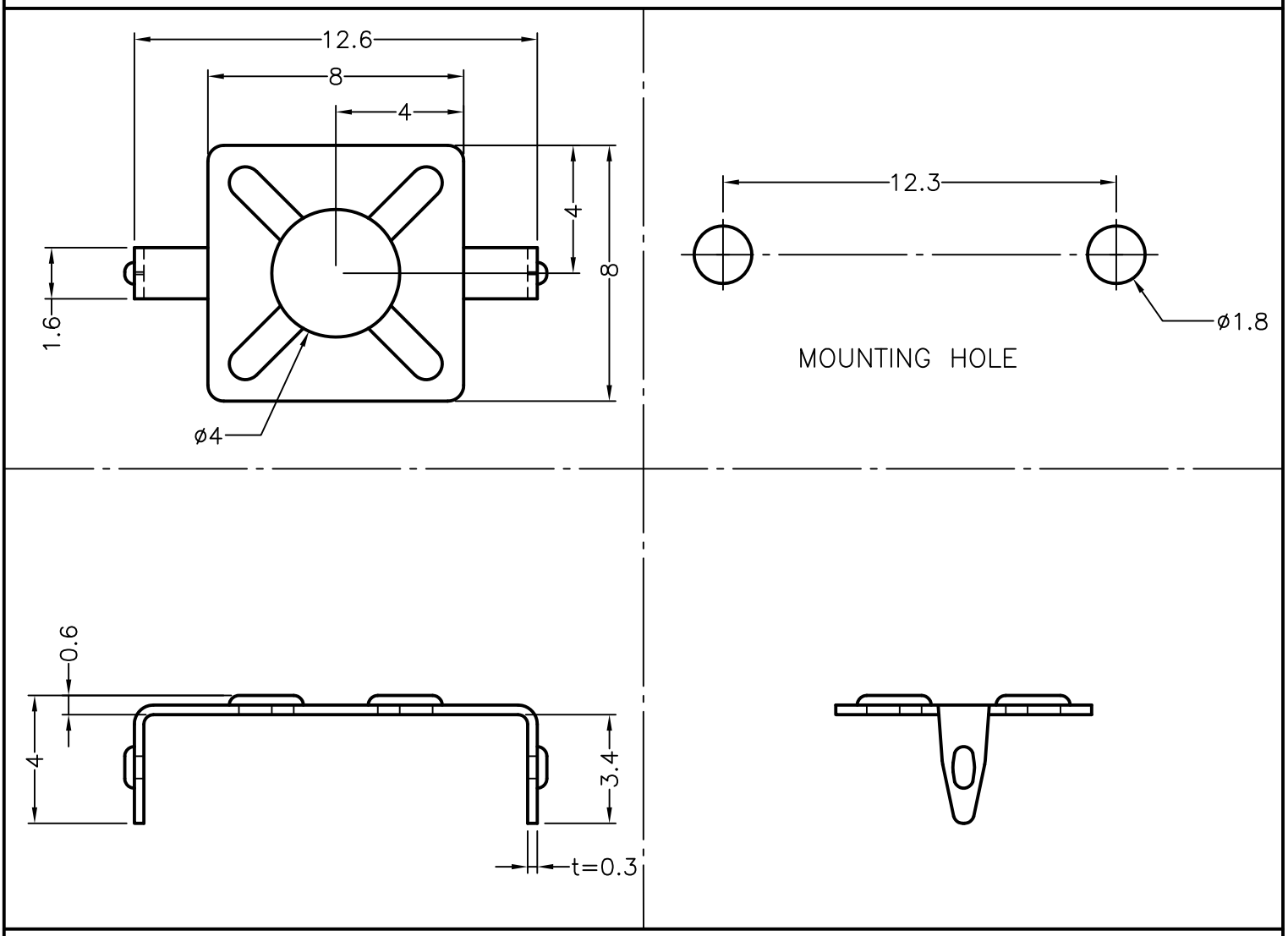
12.6
8
4
4
8
1.6
ø4
12.3
ø1.8
MOUNTING HOLE
0.6
4
3.4
t=0.3