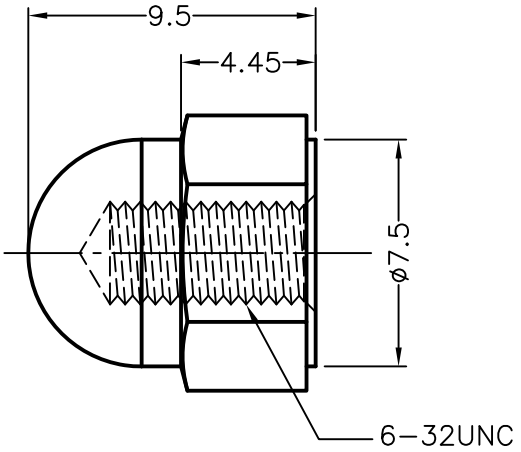
9.5
4.45
ø7.5
6–32UNC

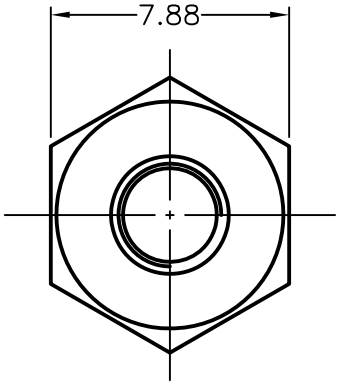
7.88