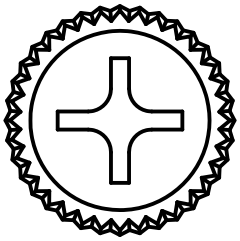

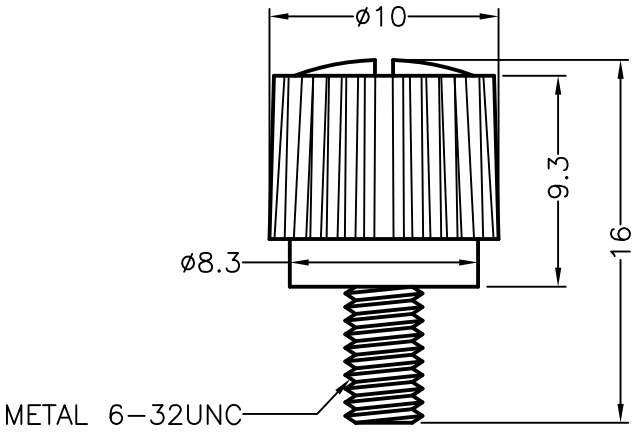
ø10
9.3
16
ø8.3
METAL 6–32UNC